
PRICE
CE

THE **PRICE** PUMP
WHY BUY **PRICE** PUMP

PRICE PUMP PVT LTD

For the last two decades, PRICE Pumps Pvt. Ltd, India's largest manufacturer of air-operated double diaphragm pumps, has been providing the industry experts with the most reliable pumps on the market. PRICE pumps are self-priming, can handle viscous and abrasive products and can run dry without damage. Additionally, they do not employ costly motors, variable speed drives, by-pass plumbing or mechanical seals.

Please see the matrix below for a comparison of the **PRICE air operated Diaphragm pumps** versus **Rotary** and **Centrifugal pumps**:

	SOLIDS PASSAGE	SHEAR SENSITIVITY	ABRASIVES HANDLING	SOLVENT HANDLING	DRY PRIMING	VISCOUS FLUIDS HANDLING	MAINTANANCE COSTS
Vane Pumps	★	★	★	★★★★	★★★	★★	★★
Internal Gear Pumps	★	★	★★★	★★★	★★	★★★★	★
External Gear Pumps	★	★	★	★★★	★★	★★★★	★
Lobe Pumps	★★★★	★★	★★★	★★	★★	★★★★	★
Centrifugal Pumps	★	★	★★★	★★★	★★	★	★★★
Progressive Cavity Pumps	★	★★	★★★★	★★★	★★★★	★★★★	★
Piston/Plunger Pumps	★★	★	★★★	★★	★★★★	★★★★	★
PRICE Diaphragm Pumps	★★★★	★★★★	★★★★	★★★★	★★★★	★★★★	★★★★

★★★★ - Excellent, ★★★ - Good, ★★ - Average, ★ - Poor

WHY BUY PRICE PUMPS

1. The pumps can run dry indefinitely without damage.
2. No shaft seals or gland packing.
3. Infinitely variable flow & discharge pressure from 0 to pump's maximum by adjusting air pressure. One pump can fit a broad spectrum of applications.
4. Gentle non-shearing action.
5. If discharge is clogged or closed pump stops immediately; no power consumed, no heat, no wear - By opening discharge, flow starts automatically.
6. Operates submerged or with flooded suction.
7. Self- priming from a dry start.
8. Pressure up to 100 PSI (7 bar).
9. No close fitting, sliding or rotating parts so can handle a wide variety of fluids with high solids content.
10. Low internal velocity reduces wear.
11. Quick assembly and disassembly with split clamp bands.
12. Capable of pumping at high temperatures.
13. Quiet, steady discharge flow without use of pulsation dampener.
14. Safe for use in explosive environments.
15. No electrical hazards or costly motor and control equipment needed.
16. No pressure relief or bypass.

INSTALLATION VERSATILITY

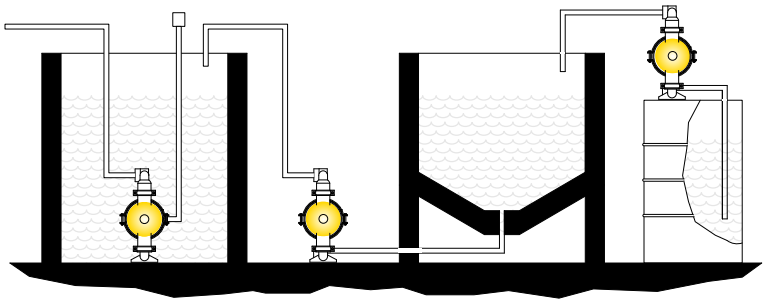

SUBMERGED
PRICE Pumps are totally submersible.
It is important that the air exhaust be ported above the level of the fluid, and that the materials of construction also be compatible with the fluid that the pump is submerged in.

POSITIVE SUCTION
Pump can draw from the bottom of the vessel. Preferred installation for viscous fluids. For emptying tanks it is important to limit the inlet fluid pressure to approximately 10 PSI (0.69 bar) for Teflon diaphragms and 15 PSI (1.03 bar) for rubber and sentoprene diaphragms.

SELF PRIMING
The suction capabilities of each pump may vary due to system design, product being pumped, and pump materials of construction. Please consult the factory with specific criteria.

THE **PRICE** PUMP
ELASTOMER OPTIONS ETC

Solvents | Acids | Caustics | High Viscosity | Low Viscosity

AVAILABLE MATERIALS OF CONSTRUCTION - PUMPS

	AOD 15	AOD 30	AOD 40	AOD 400	AOD 25	AOD 55	AOD 50	AOD 500	M 50FV	AOD 80	AOD 800
Suction/discharge size	½"	1"	1½"			2"				3"	
Polypropylene (PP)	✓	✓	✓	✓	✓	✓	✓		✓*		✓
Polyvinylidene Fluoride (PVDF)	✓	✓	✓			✓					✓
Stainless Steel (SS)	✓	✓	✓	✓		✓		✓			✓
Aluminium (AL)		✓	✓			✓				✓	
Cast Iron (CI)			✓			✓				✓	

* Available in Glass Filled PP.
Please consult us for your Hastelloy C, Alloy 20 etc requirements.

AVAILABLE MATERIALS OF CONSTRUCTION - ELASTOMERS

ELASTOMER OPTIONS	DIAPHRAGM	BALL VALVE	BALL SEAT	O-RINGS
Neoprene	✓	✓	✓	✓
Viton	✓	✓	✓	✓
Nitrile (Buna-N)	✓	✓	✓	✓
Butyl	✓	✓	✓	
Teflon Ptfe	✓	✓		
Santoprene	✓			
Hypalon	✓	✓		
Epdm (Nordel)	✓	✓	✓	
Polypropylene (PP)			✓	
Stainless Steel (SS)		✓	✓	
Aluminium (AL)			✓	
Polyvinylidene Fluoride (PVDF)			✓	
Cast Iron (CI)			✓	

TEMPERATURE LIMITS

Polypropylene	0°C **to** 79°C (32°F to 175°F)
PVDF	–12°C **to** 107°C (10°F to 225°F)
Neoprene	–17.8°C **to** 93.3°C (0°F to 200°F)
Buna-N	–12.2°C **to** 82.2°C (10°F to 180°F)
Nordel®	–51.1°C **to** 137.8°C (–60°F to 280°F)
Viton®	–40°C **to** 176.7°C (–40°F to 350°F)
Teflon® PTFE	4.4°C **to** 104.4°C (40°F to 220°F)

WETTED MATERIAL COMATIBILITY

FLUID SOLUTIONS	NUMERIC pH LEVEL	WETTED PART MOC
Alkaline Caustic	14 13 12 11	PP, Stainless Steel
Basic	10 9	Caste Iron
Neutral	8 7 6	PP, Aluminium
Acid	5 4	PP, PVDF
	3 2 1 0	PP PVDF Stainless Steel

Dyes | Abrasive Media | Hazardous Liquids | Cleanroom Fluids | Shear Sensitive Liquids

THE **PRICE** PUMP
INDUSTRIES SERVED

Automotive Industry: Grinding emulsion, oil, coolant, hydraulic fluid, sulfuric, automotive primer, soluble oil, varnish disposal, varnish additives, degreasing baths, cutting oil, water and glycol mixture, paint

Aviation: Aircraft fuelling and drainage, satellite refueling, solid rocket propellant, missile silos

Beverage Industry: Yeast, diatomaceous earth slurry, hot pulp, liquid hops, sugar syrup, concentrates, gas-liquid mixtures, wine, fruit pulp, fruit juice, corn syrup

Ceramics: Slip, glaze, enamel slip, effluent, clay, clay slurry, lime slurry, kaolin slurry

Chemical Industry: Acids, alkalies, solvents, suspensions, dispersions, magnesium hydroxide, varnishes, sump water, resins, latex, adhesives, effluent sludge, stabilizers, filter press, electrolytes

Construction Industry: Sump and pit drainage, cement slurry, ceramic tile adhesive, rock slurry, ceiling coating paints, texture spray

Cosmetics: Lotions, creams, shampoos, emulsions, hand creams, surfactants, hair permanents, soaps

Electronics Industry: Solvents, electroplating baths, ultrapure liquids, carrier fluids for ultrasonic washing, sulfuric, nitric and acid wastes, etching acids, MEK, acetone, polishing compounds

Food: Brine, chocolate, vinegar, molasses, dog food, vegetable oil, soy bean oil, honey, cat food, HCL, animal blood

Furniture Industry: Adhesives, varnishes, dispersions, solvents, stains, Elmer's Glue, white good glue, solvents, glue (5-6000 cps) epoxy, starch adhesives, spray packages

Mining: Sump gallery drainage, water drainage, coal sludge and rock slurry, cement slurry, grounting mortar, oil transfer, explosive slurry, adhesive, lube oil, foaming

Municipalities: Tank and sump drainage, sewer cleaning, chemicals, contaminated surface water, emergency pumping, spill clean-up, waste oil, oil/water separators

Paints & Coatings: Resins, solvents, acrylic, wood preservative stain, concrete paints, varnishes, titanium dioxide slurry, primers, stains, dispersions, varnish cleaning baths, alkalyd resin

Pharmaceutical Industry: Vegetables extracts, tablet pastes, ointments, alcohols, filtering aids, ultra filtration, Blood plasma, waste solvents, sump waste

Plating: Anodic sludge, electroplating baths, varnishes, enamels, solvents, cleaning baths, filtering

Pulp/Paper/Packaging: Latex, adhesives, paints, resins, printing inks, dispersions, TiO2 slurry, Kaolin clay, hydrogen peroxide

Refineries: Tank roof drainage, oil sludge, tank cleaning, tank moat drainage, portable pumping

Road Tanker Trucks: Loading and draining of tank by means of pump on vehicle, tank vehicle washing facilities, acid spraying, foaming

Shipbuilding: Tank and bilge drainage, ship cleaning, stripping, oil skimming, seawater

Smelters, Foundries & Dye Casting: Metal slurry, hydroxide and carbide slurry, dust scrubbing slurry, back wash for flushing of cores, mold release

Textile & Carpet: Dyeing chemical, scotch guard, starch and sizing, resins, dyes, latex

Water and Sewage Treatment: Milk of lime, thin slurry, effluents, chemicals, charging of filter presses, polymer, waste water

Utility: Contaminated liquids, charging of scrubbers, milk of lime, transformer oil, resins

THE **PRICE** PUMP
HOW THE PUMP WORKS

HOW THE PUMP WORKS

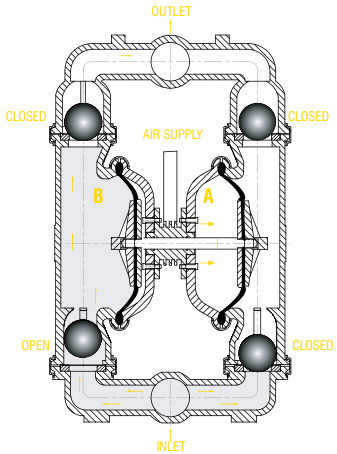

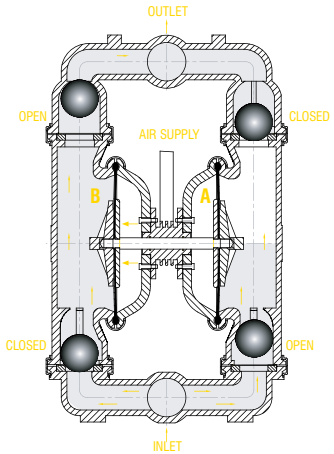

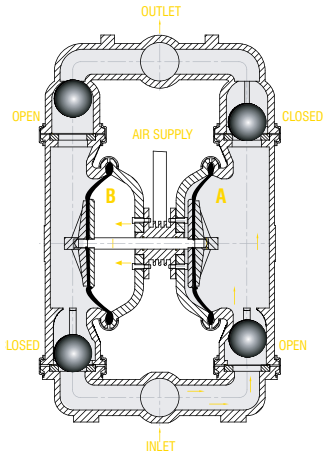

FIGURE 1 (LEFT STROKE)
The air valve directs pressurized air to the back side of diaphragm A. The compressed air is applied directly to the liquid column separated by elastomeric diaphragms. The diaphragm acts as a separation membrane between the compressed air and liquid, balancing the load and removing mechanical stress from the diaphragm. The compressed air moves the diaphragm away from the center block of the pump. The opposite diaphragm is pulled in by the shaft connected to the pressurized diaphragm. Diaphragm B is on its suction stroke; air behind the diaphragm has been forced out to the atmosphere through the exhaust port of the pump. The movement of diaphragm B toward the center block of the pump creates a vacuum within chamber B. Atmospheric pressure forces fluid into the inlet manifold forcing the inlet valve ball off its seat. Liquid is free to move past the inlet valve ball and fill the liquid chamber (see shaded area).

FIGURE 2 (MID STROKE)
When the pressurized diaphragm, diaphragm A, reaches the limit of its discharge stroke, the air valve redirects pressurized air to the back side of diaphragm B. The pressurized air forces diaphragm B away from the center block while pulling diaphragm A to the center block. Diaphragm B is now on its discharge stroke. Diaphragm B forces the inlet valve ball onto its seat due to the hydraulic forces developed in the liquid chamber and manifold of the pump. These same hydraulic forces lift the discharge valve ball off its seat, while the opposite discharge valve ball is forced onto its seat, forcing fluid to flow through the pump discharge. The movement of diaphragm A toward the center block of the pump creates a vacuum within liquid chamber A. Atmospheric pressure forces fluid into the inlet manifold of the pump. The inlet valve ball is forced off its seat allowing the fluid being pumped to fill the liquid chamber.

FIGURE 3 (RIGHT STROKE)
At completion of the stroke, the air valve again redirects air to the back side of diaphragm A, which starts diaphragm B on its exhaust stroke. As the pump reaches its original starting point, each diaphragm has gone through one exhaust and one discharge stroke. This constitutes one complete pumping cycle. The pump may take several cycles to completely prime depending on the conditions of the application.

The PRICE diaphragm pump is an air-operated, positive displacement, self-priming pump. These drawings show the flow pattern through the pump upon its initial stroke.

It is assumed the pump has no fluid in it prior to its initial stroke.

INDUSTRIES SERVED

- Automotive Industry
- Aviation
- Beverage Industry
- Ceramics
- Chemical Industry
- Construction Industry
- Cosmetics
- Electronics Industry
- Food
- Latex
- Mining
- Municipalities
- Paints, Inks & Coatings
- Pharmaceutical Industry
- Plating & Finishing
- Pulp Paper Packaging
- Refineries
- Road Tanker Trucks
- Shipbuilding
- Smelters, Foundries & Dye Casting
- Textile & Carpet
- Water and Sewage Treatment

SPECIFICATIONS AND PERFORMANCE
½" BSP (15mm)

MOCs Available: PP, PVDF, SS 316

Max Flow Rate: 23Lpm (6gpm)
Port Size: **Inlet:** 12.70mm (½"BSP)
Discharge: 12.70mm (½"BSP)
Air Inlet: 6.35mm (¼"BSP)
Air Exhaust: 12.70mm (½"BSP)
Suction Lift: **Dry:** 1.45m (4.75')
Wet: 2.83m (9.28')
Teflon: **Dry:** 0.50m (1.64')
Wet: 0.90m (2.95')
Max Particle Size (Dia): 2mm (0 .078")

AOD 15 PP

AOD 15 PVDF

AOD 15 SS

PERFORMANCE **AOD 15** | 1/2"BSP (15mm)

* For TEFLON diaphragms, reduce water discharge figures by 20%.

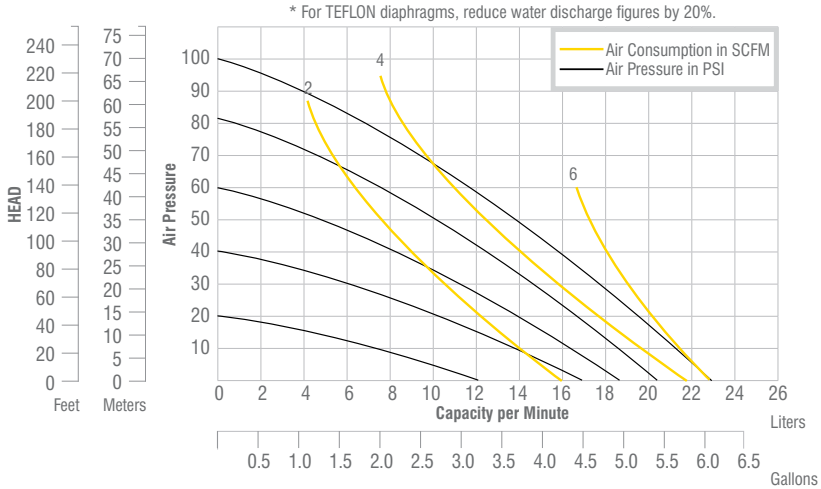

FULLY BOLTED DESIGNS FOR PP, PVDF & SS UNDER DEVELOPMENT. WILL BE AVAILABLE SOON.

SPECIFICATIONS AND PERFORMANCE
1” BSP (25mm)

MOCs Available: PP, PVDF, SS 316, AL

Max Flow Rate: 135Lpm (34gpm)
Port Size: **Inlet:** 25.40mm (1”BSP)
Discharge: 25.40mm (1”BSP)
Air Inlet: 9.53mm (3/8”BSP)
Air Exhaust: 12.70mm (1/2”BSP)
Suction Lift: **Dry:** 3.05m (10’)
Wet: 4.89m (16’)
Teflon: **Dry:** 2.14m (7’)
Wet: 3.98m (13’)
Max Particle Size (Dia): 3.17mm (0.125”)

AOD 30 PP

AOD 30 PVDF

AOD 30 SS

AOD 30 AL

PERFORMANCE **AOD 30** | 1”BSP (25mm)

* For TEFLON diaphragms, reduce water discharge figures by 20%.

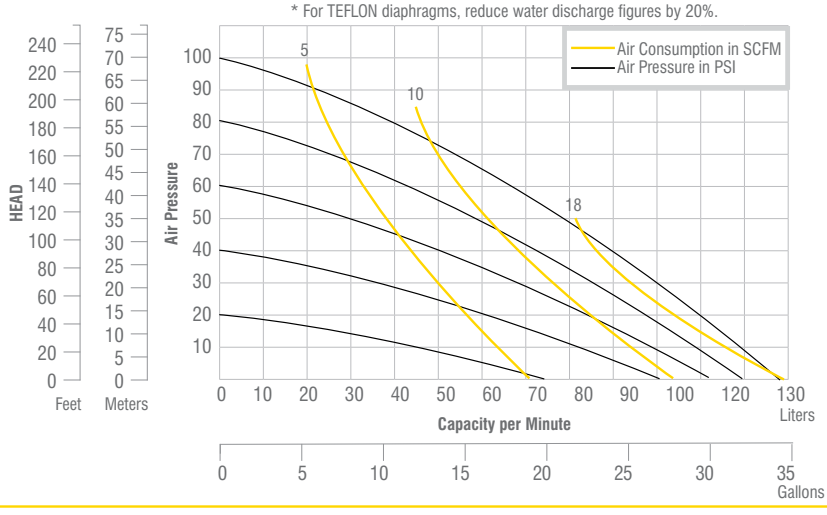

FULLY BOLTED DESIGNS FOR PP, PVDF & SS UNDER DEVELOPMENT. WILL BE AVAILABLE SOON.

SPECIFICATIONS AND PERFORMANCE
1½" BSP (40mm)

MOCs Available: PP, PVDF, SS 316, AL, CI

Max Flow Rate:	270Lpm (72gpm)
Port Size:	**Inlet:** 38.10mm (1½"BSP)
	Discharge: 38.10mm (1½"BSP)
	Air Inlet: 9.64mm (⅜"BSP)
	Air Exhaust: 12.70mm (½"BSP)
Suction Lift:	**Dry:** 4.57m (15')
	Wet: 7.62m (25')
Teflon:	**Dry:** 3.05m (10')
	Wet: 6.09m (20')
Max Particle Size (Dia):	4.76mm (0.188")

AOD 40 PP

AOD 40 PVDF

AOD 40 SS

AOD 40 AL

AOD 25 PP

NEW! BOLTED DESIGN

AOD 400 SS

PERFORMANCE **AOD 25/40/400** | 1½"BSP (40mm)

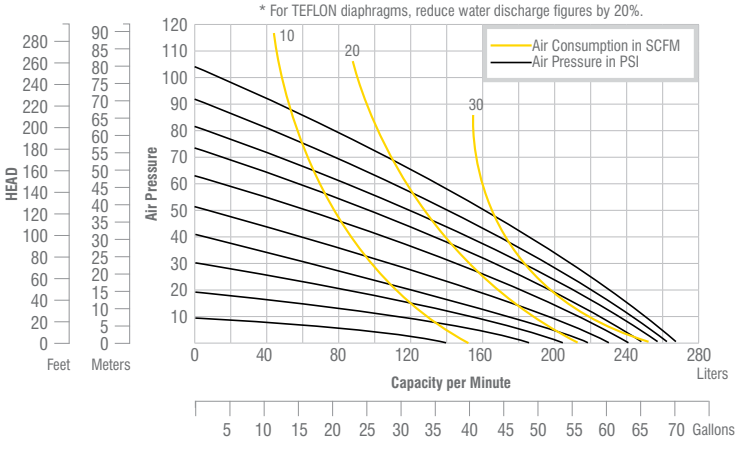

FULLY BOLTED DESIGNS FOR PP & PVDF UNDER DEVELOPMENT. WILL BE AVAILABLE SOON.

SPECIFICATIONS AND PERFORMANCE
2” BSP (50mm)

MOCs Available: PP, PVDF, SS 316, AL, CI

Max Flow Rate: 586Lpm (155gpm)
Port Size: **Inlet:** 50.80mm (2”BSP)
Discharge: 50.80mm (2”BSP)
Air Inlet: 12.70mm (1/2”BSP)
Air Exhaust: 19.05mm (3/4”BSP)
Suction Lift: **Dry:** 4.57m (15’)
Wet: 7.62m (25’)
Teflon: **Dry:** 3.05m (10’)
Wet: 6.09m (20’)
Max Particle Size (Dia): 6.35mm (0.250”)

AOD 55 PP

AOD 55 PVDF

AOD 55 SS

AOD 55 AL

AOD 50 PP

AOD 500 SS

PERFORMANCE **AOD 50/55/500** | 2” (50mm)

* For TEFLON diaphragms, reduce water discharge figures by 20%.

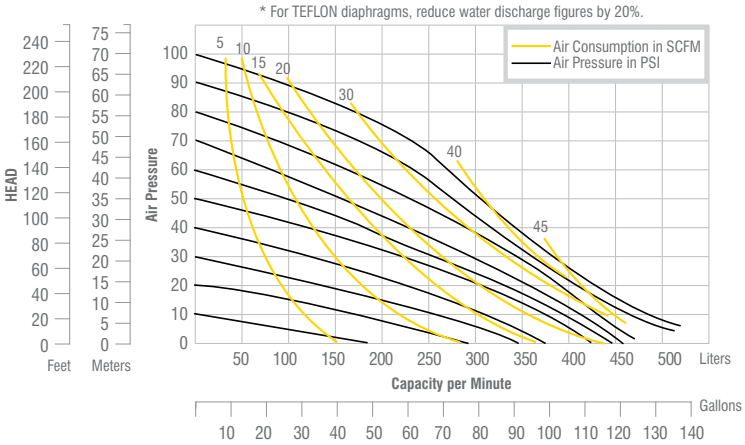

FULLY BOLTED DESIGNS FOR PP, & PVDF UNDER DEVELOPMENT. WILL BE AVAILABLE SOON.

SPECIFICATIONS AND PERFORMANCE
3” BSP (80mm)

MOCs Available: PP, PVDF, SS 316, CI

Max Flow Rate:	900Lpm (238gpm)
Port Size:	**Inlet:** 76.20mm (3”BSP)
	Discharge: 76.20mm (3”BSP)
	Air Inlet: 12.70mm (1/2”BSP)
	Air Exhaust: 19.05mm (3/4”BSP)
Suction Lift:	**Dry:** 6.09m (20’)
	Wet: 7.62m (25’)
Teflon:	**Dry:** 3.05m (10’)
	Wet: 6.09m (20’)
Max Particle Size (Dia):	19.10mm (0.750”)

AOD 800 PP

AOD 80 AL

AOD 800 SS

PERFORMANCE **AOD 80/800** | 3” (80mm)

* For TEFLON diaphragms, reduce water discharge figures by 20%.

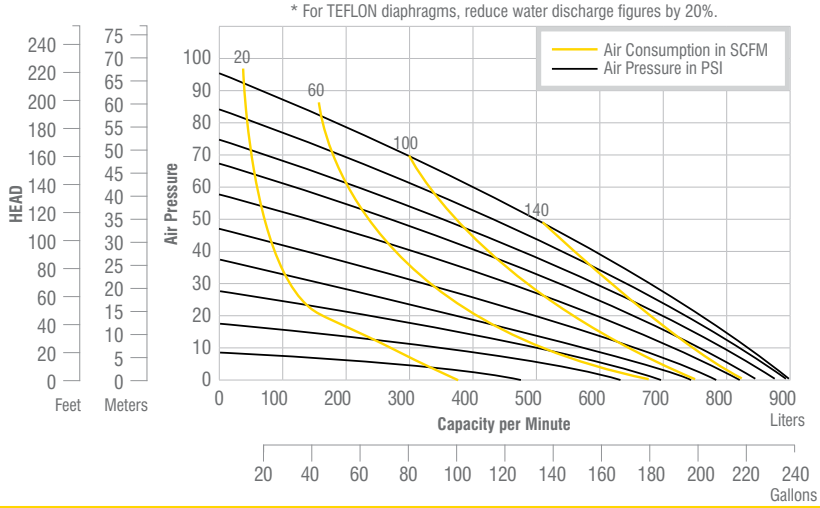

INTRODUCING

FLAP VALVE PUMP IN 2” BSP (50mm)

MOCs Available: GFPP

Max Flow Rate:	586Lpm (155gpm)
Port Size:	**Inlet:** 50.80mm (2”BSP)
	Discharge: 50.80mm (2”BSP)
	Air Inlet: 12.70mm (1/2”BSP)
	Air Exhaust: 19.05mm (3/4”BSP)
Suction Lift:	**Dry:** 4.57m (15’)
	Wet: 7.62m (25’)
Teflon:	**Dry:** 3.05m (10’)
	Wet: 6.09m (20’)
Max Particle Size (Dia):	6.35mm (0.250”)

M 50 FV

PERFORMANCE **M 50 FV** | 2” (50mm)

* For TEFLON diaphragms, reduce water discharge figures by 20%.

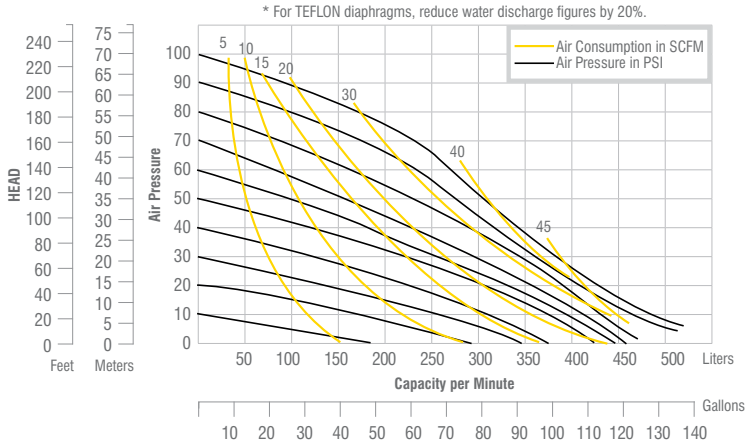

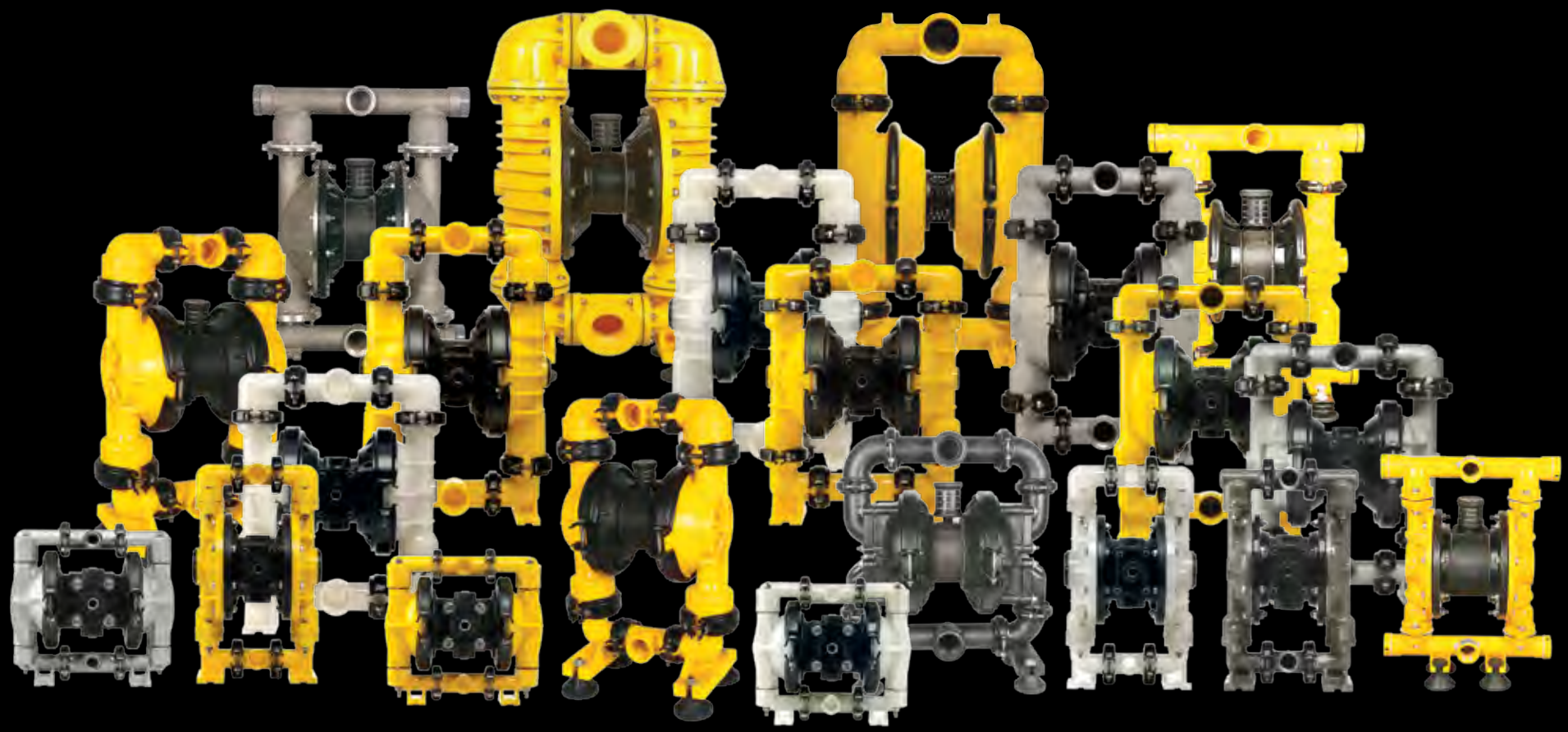

PRICE PUMPS PVT. LTD.
Air Operated Double Diaphragm Pumps
Office 8 Hind Service Industrial Estate, Gr Floor
Sant Gyaneshwar Road, Shivaji Park
Mumbai 400028, India

t +91 22 2444 0582, +91 22 2444 0592
f +91 22 2444 0588
e office@pricepumps.co.in
w www.pricepumps.co.in

design@sixofusdesign.com PPPL/08_sd